US006234115B1

(12) **United States Patent**
Blum et al.

(10) **Patent No.: US 6,234,115 B1**
(45) **Date of Patent: *May 22, 2001**

(54) **NESTING BOX FOR EXCRETA COLLECTION FROM NESTING DAMS THROUGH PARTURITION AND LACTATION**

(75) Inventors: **Carmen A. Blum**, St. Charles, MO (US); **Maryka H. Bhattacharyya**, Naperville; **Allison K. Wilson**, Elmhurst, both of IL (US)

(73) Assignee: **The University of Chicago**, Chicago, IL (US)

(*) Notice: This patent issued on a continued prosecution application filed under 37 CFR 1.53(d), and is subject to the twenty year patent term provisions of 35 U.S.C. 154(a)(2).

Subject to any disclaimer, the term of this patent is extended or adjusted under 35 U.S.C. 154(b) by 0 days.

(21) Appl. No.: **09/130,510**

(22) Filed: **Aug. 6, 1998**

(51) **Int. Cl.**[7] **A01K 1/02**; A01K 1/03; A01K 31/06

(52) **U.S. Cl.** **119/472**; 119/452; 119/473; 119/417

(58) **Field of Search** 119/417, 452, 119/454, 455, 456, 478, 483, 487, 500, 472; D30/42

(56) **References Cited**

U.S. PATENT DOCUMENTS

D. 231,371 * 4/1974 Willinger et al. 119/452
3,122,127 * 2/1964 Shechmeister et al. 119/452
4,480,587 * 11/1984 Sedlacek 119/419
4,640,228 * 2/1987 Sedlacek et al. 119/419
4,763,607 * 8/1988 Tominaga 119/452
4,953,502 * 9/1990 Hoover 119/452
5,054,427 * 10/1991 Hoover 119/452
5,092,269 * 3/1992 Phillips et al. 119/452
5,134,969 * 8/1992 Mason et al. 119/468
5,363,801 * 11/1994 Watters et al. 119/452
5,431,129 * 7/1995 Clark 119/468
5,577,464 * 11/1996 Wellington et al. 119/452
5,865,144 * 2/1999 Semenuk 119/456
6,044,799 * 4/2000 Tominaga 119/472

* cited by examiner

Primary Examiner—Charles T. Jordan
Assistant Examiner—Judith A. Nelson
(74) *Attorney, Agent, or Firm*—Mason, Kolehmainen, Rathburn & Wyss

(57) **ABSTRACT**

A nesting box is provided for use with a metabolism cage. The nesting box comprises an enclosure for receiving a nesting dam. The enclosure has a top wall, a bottom wall and sidewalls. Either the top wall or one of the sidewalls includes an entrance/exit aperture. The entrance/exit aperture has a selected size that is selectively provided relative to a defined size of the nesting dam. The nesting box is formed of a substantially transparent material allowing observation of the nesting dam and pups without opening the box. The nesting box is adapted for use with different laboratory animals, such as mice, hamsters, gerbils, rats, guinea pigs, and rabbits.

20 Claims, 4 Drawing Sheets

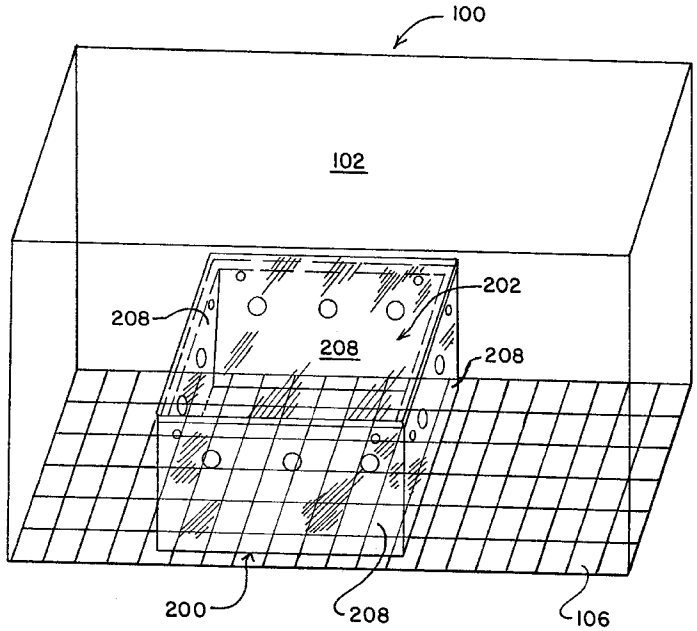

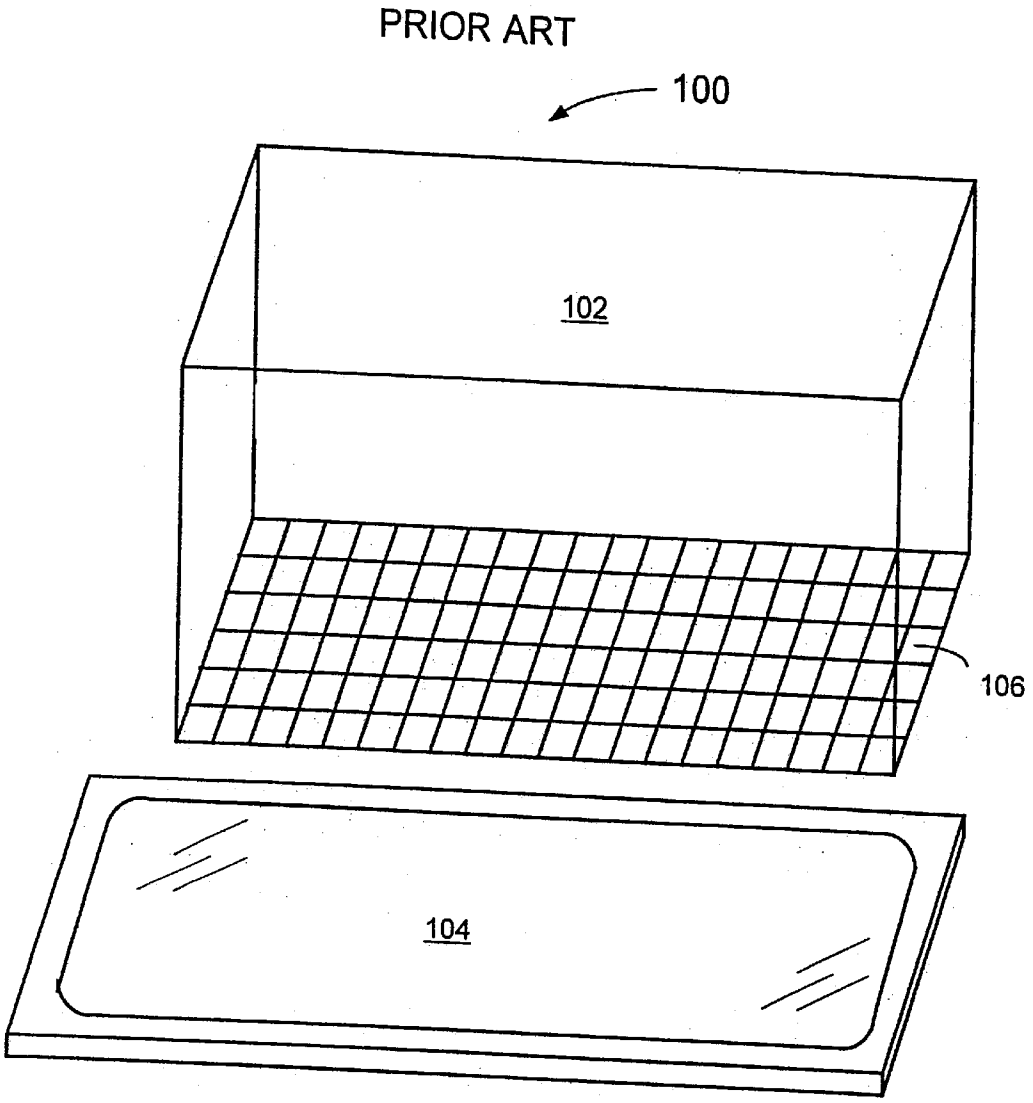

FIG. 1

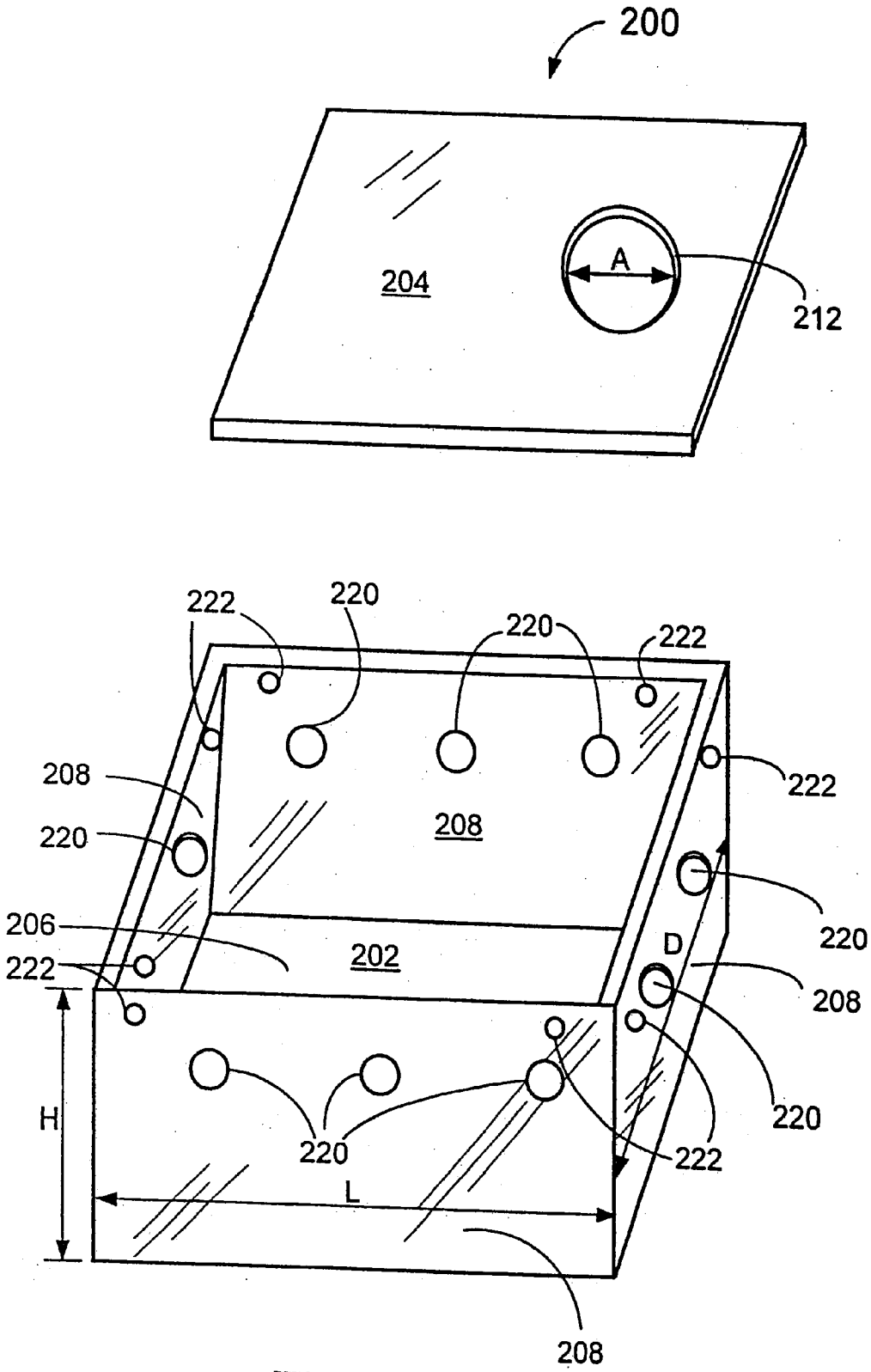
200
204
A
212
222
220
220
222
208
222
208
220
220
206
202
D
222
208
220
H
220
222
L
208

FIG. 2

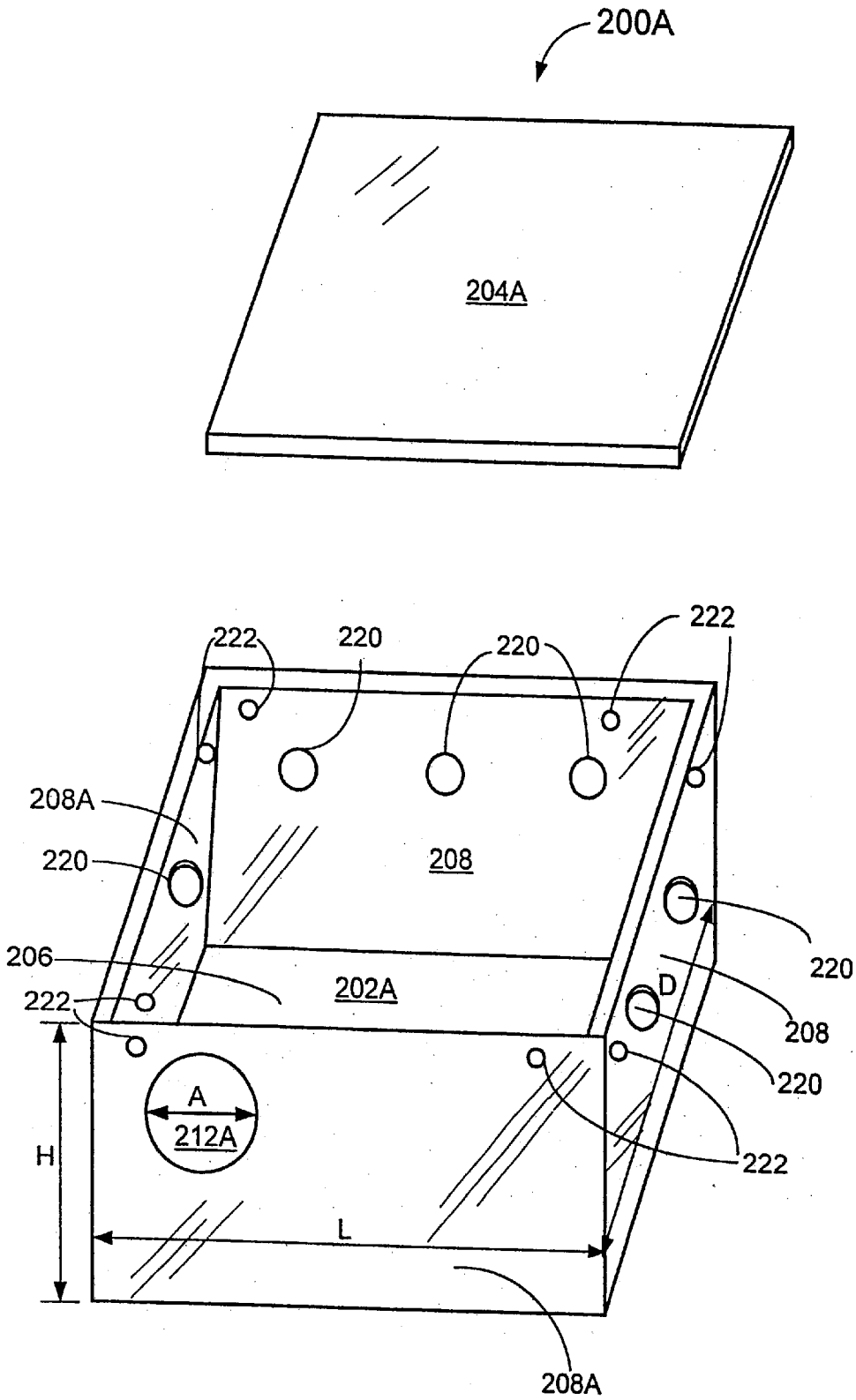
200A
204A
222
220
220
222
208A
220
208
206
202A
222
D
220
208
220
A
212A
H
222
L
208A

FIG. 3

FIG. 4

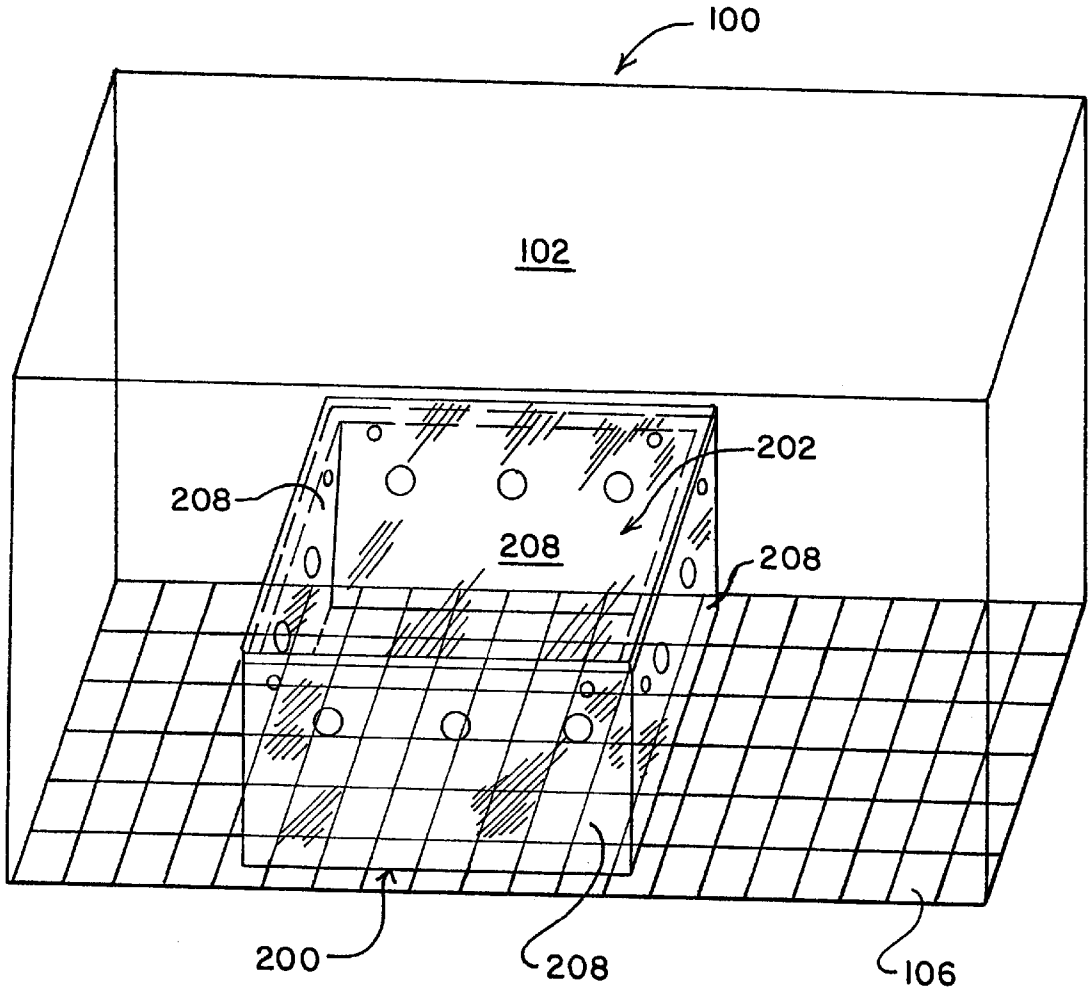

NESTING BOX FOR EXCRETA COLLECTION FROM NESTING DAMS THROUGH PARTURITION AND LACTATION

CONTRACTUAL ORIGIN OF THE INVENTION

The United States Government has rights in this invention pursuant to Contract No. W-31-109-ENG-38 between the United States Government and the University of Chicago.

FIELD OF THE INVENTION

The present invention relates to a nesting box, and more particularly to, a nesting box for use with a metabolism cage to facilitate the collection of excreta from pregnant female laboratory animals or dams through pregnancy, parturition and lactation.

DESCRIPTION OF THE RELATED ART

Metabolism cages often are used to house animals used in laboratory studies. For example, in kinetic studies using animals, excreta can be analyzed for metabolites or metals. The collection of excreta from laboratory dams, such as mouse dams, through pregnancy, parturition, and lactation to the weaning of the young presents a challenge. The most practical method of fecal collection is to place the animal into a metabolism cage.

FIG. **1** illustrates a prior art arrangement **100** of a metabolism cage **102** together with a collection tray **104**. The bottom **106** of the metabolism cage **102** is a grating that allows the fecal pellets to fall through to the tray for easy collection. However, the grating openings are large enough that the mouse pups from birth to about one week of age will also fall through, resulting in their death from exposure and lack of food.

SUMMARY OF THE INVENTION

A principal object of the present invention is to provide a nesting box for use with a metabolism cage. Other important objects of the present invention are to provide such nesting box substantially without negative effects and that overcome

FIG. **3** is a diagram illustrating an alternative nesting box arranged in accordance with the present invention; and

FIG. **4** illustrates the nesting box of FIG. **2** disposed within the metabolism cage of FIG. **1** (the lid of the nesting box is not shown for clarity purposes).

DETAILED DESCRIPTION OF THE PREFERRED EMBODIMENTS

Having reference now to the drawings, in FIG. **2** there is shown a nesting box generally designated as **200** and arranged in accordance with the present invention. The nesting box **200** advantageously can be adapted for use with multiple different pregnant laboratory animals or dams. As shown in FIG. **2**, the nesting box **200** has a generally rectangular shape. Nesting box **200** has a selected size for a particular type of laboratory animal.

In accordance with features of the invention, the nesting box **200** facilitates the collection of excreta during metabolic and pharmacokinetic studies from the female laboratory animals through pregnancy, parturition, and lactation to the weaning of the young pups. The nesting box **200** is placed in a metabolism cage **102**, such as shown in FIG. **1**, in which laboratory animals reside during metabolic studies. The dams deliver their pups inside the nesting box **200** and produced excreta outside the nesting box **200**. The floor grating **106** of the metabolism cage **102** allows the fecal pellets to fall through to a collection tray **104** for easy collection.

The nesting box **200** includes an enclosure **202** having a removable top wall or lid **204**, a bottom wall **206** and sidewalls **208**. The nesting box **200** includes an entrance/exit or access opening **212** defined in the removable lid **204**. The access opening **212** has a selected diameter that is provided relative to a defined size of a particular laboratory animal. The access opening **212** has a selected size to allow passage of the pregnant female but small enough that the nursing pups release their grip when the female exits the nesting box **200**. The access hole **212** is positioned offset from center of the lid **204** toward one side to provide a covered nesting area

include pigment for color coding of experiment groups. The nesting box **200** is substantially transparent and the lid **204** is removable, making it easy to observe the pups and the nesting dam. The top wall or lid **204** is removable for easy cleaning of the nesting box **200** after an experiment. A layer of cedar shavings or similar material (not shown) is used as nesting material on the bottom wall **206** of the nesting box **200**.

Nesting box **200** has been tested with mice and allows quantitative collection of excreta from mouse dams. Nesting box **200** can also be adapted for use with rabbits, rats, guinea pigs, hamsters, gerbils, and other laboratory animals.

Referring now to FIG. **3**, there is shown an alternative nesting box generally designated as **200**A and arranged in accordance with the present invention. In FIG. **3**, the same reference numbers as used with the nesting box **200** of FIG. **2** are used for similar or unchanged features of the nesting box **200**A. In the nesting box **200**A, an access opening **212**A

the mouse entry/exit hole **212** was 4 cm. in diameter and located offset from center of the lid **204**. Cedar shavings to about 2 cm. depth were placed in the mouse nesting box **200**, providing nesting material for the dam during gestation and lactation. The size of the access hole **212** was such that the mouse dam could readily exit the box even in late gestation. During lactation, the lid and hole combination released nursing pups from the dam on her exit from the box **200**. The holes **220** drilled into the vertical sides provided effective ventilation. The largely transparent plastic forming the mouse nesting box enclosure **202** allowed observation of the mouse dam and pups without opening the box, resulting in less disturbance of the dam during the early, critical days of lactation. The lid **204** of the nesting box **200** is removable for easy cleaning of the nesting box after the experiment.

Nesting box **200** has also been used as a post surgery recovery area for mice recovering from ovariectomies and sham-ovariectomies. Placing a still mildly sedated post-

10. A nesting box as recited in claim **1** wherein said entrance/exit aperture has a selected size in a range between 4 cm. and 15 cm. diameter.

11. A nesting box as recited in claim **1** wherein said entrance/exit aperture has a selected size of approximately 4 cm. for use with mice.

12. A nesting box as recited in claim **1** wherein said sidewalls have a height of approximately 7 cm. for use with mice.

13. A nesting box as recited in claim **1** wherein said entrance/exit aperture has a selected size of approximately 6 cm. for use with hamsters and gerbils.

14. A nesting box as recited in claim **1** wherein said entrance/exit aperture has a selected size of approximately 12 cm. for use with rats and guinea pigs.

15. A nesting box as recited in claim **1** wherein said enclosure includes anchoring apertures for anchoring the nesting box to the metabolism cage.

16. In combination with a metabolism cage having sidewalls and a grating floor, a nesting box to facilitate the collection of excreta from laboratory dams through pregnancy, parturition and lactation comprising:

an enclosure for receiving a nesting dam, said enclosure having a removable top wall, a bottom wall and sidewalls; said enclosure being disposed within said sidewalls and grating floor of said metabolism cage; and said enclosure being formed of a substantially transparent material; and

said top wall including an entrance/exit aperture, said entrance/exit aperture having a selected size, said selected size being selectively provided relative to a defined size of the nesting dam.

17. A nesting box for use with a metabolism cage having sidewalls and a grating floor to facilitate the collection of excreta from laboratory dams through pregnancy, parturition and lactation comprising:

an enclosure for receiving a nesting dam, said enclosure having a removable top wall, a bottom wall and sidewalls; said enclosure being disposed within said sidewalls and grating floor of said metabolism cage; and said enclosure being formed of a substantially transparent material; and

one of said sidewalls including an entrance/exit aperture, said entrance/exit aperture having a selected size, said selected size being selectively provided relative to a defined size of the nesting dam.

18. A nesting box as recited in claim **17** wherein said entrance/exit aperture is located offset from a center of said one sidewall.

19. A nesting box as recited in claim **17** wherein said enclosure includes ventilation apertures and wherein said entrance/exit aperture has a selected size of approximately 12 cm. for use with guinea pigs and wherein said entrance/exit aperture has a selected size of approximately 15 cm. for use with rabbits.

20. A nesting box as recited in claim **17** wherein said enclosure includes anchoring apertures for anchoring the nesting box to the metabolism cage.

* * * * *