US00D413678S

United States Patent [19]

Anderson et al.

[11] Patent Number: Des. 413,678

[45] Date of Patent: ** Sep. 7, 1999

[54] **SOLID LIQUID EXTRACTOR**

[75] Inventors: **Ken B. Anderson**, Lisle; **Joseph S. Gregar**, Naperville, both of Ill.

[73] Assignee: **The University of Chicago**, Chicago, Ill.

[**] Term: **14 Years**

[21] Appl. No.: **29/066,569**

[22] Filed: **Feb. 14, 1997**

[51] **LOC (6) Cl.** **24-02**

[52] **U.S. Cl.** **D24/232**

[58] **Field of Search** D24/237, 222, D24/216; 422/50, 114, 115

[56] **References Cited**

U.S. PATENT DOCUMENTS

D. 198,160	5/1964	Thompson	D24/232
2,019,950	11/1935	Buznell	422/50
2,643,574	6/1953	Todd	422/50
3,622,441	11/1971	Perkins	422/114

Primary Examiner—Louis S. Zarfas
Assistant Examiner—G. Andoll
Attorney, Agent, or Firm—Emrich & Dithmar

[57] **CLAIM**

The ornamental design for the solid liquid extractor, as shown and described.

DESCRIPTION

The United States Government has rights in this invention pursuant to Contract No. W-31-109-ENG-38 between the U.S. Department of Energy and The University of Chicago representing Argonne National Laboratory.

FIG. **1** is a perspective view of the solid liquid extractor embodying my new design;

FIG. **2** is a top view of the solid liquid extractor illustrated in FIG. **1**;

FIG. **3** is a front view of the solid liquid extractor illustrated in FIG. **1**;

FIG. **4** is a right side view of the solid liquid extractor in FIG. **1**;

FIG. **5** is a front view of the second embodiment of the solid liquid extractor;

FIG. **6** is a top plan view of the second embodiment of the solid liquid extractor illustrated in FIG. **5**; and,

FIG. **7** is a right-side view of the second embodiment of the solid liquid extractor illustrated in FIG. **5**.

The surfaces of the solid liquid extractor that are not shown form no part of the claimed design.

1 Claim, 6 Drawing Sheets

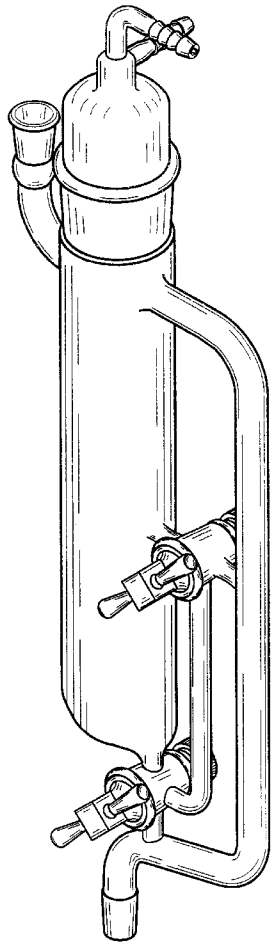

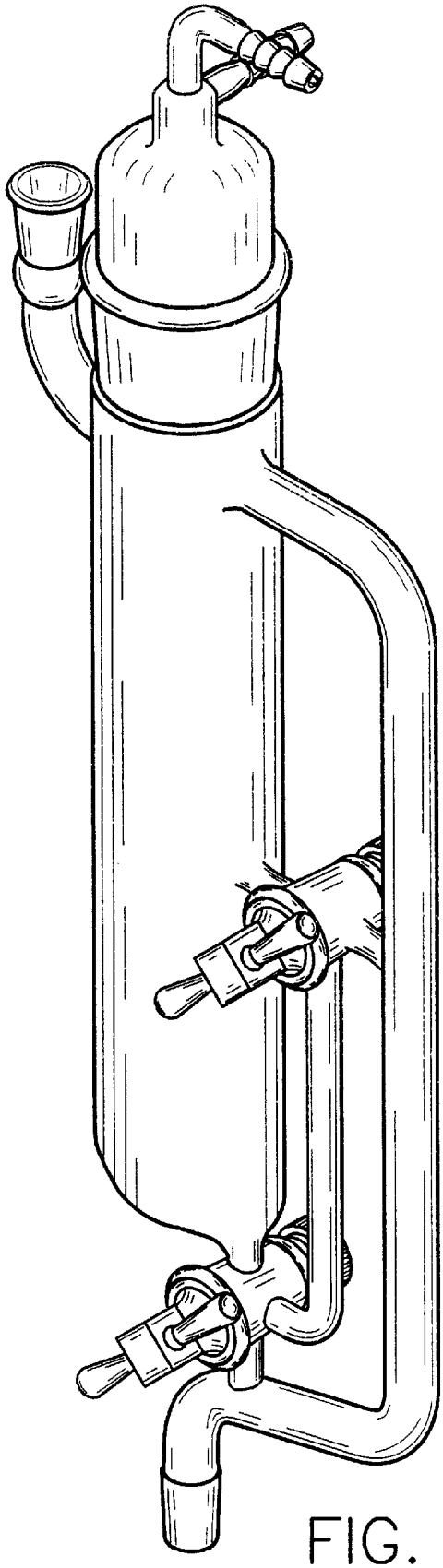

FIG. 1

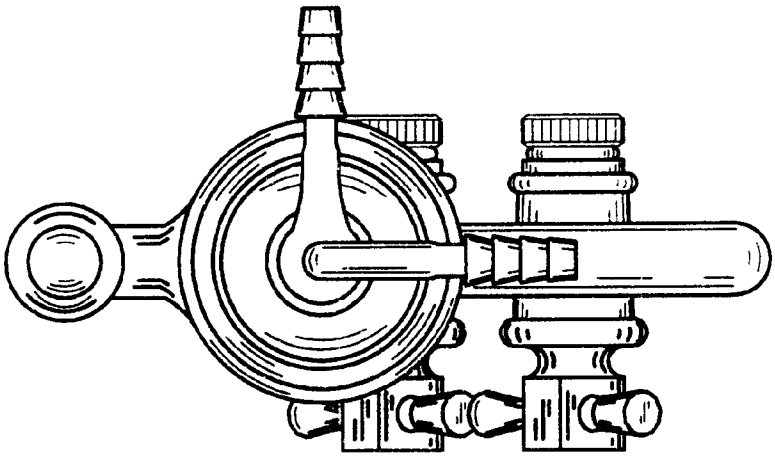

FIG. 2

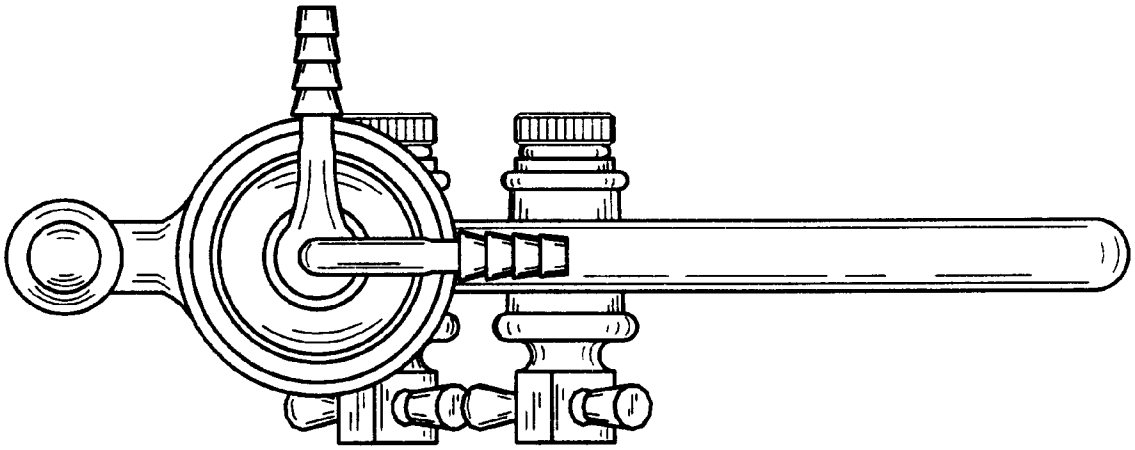

FIG. 6

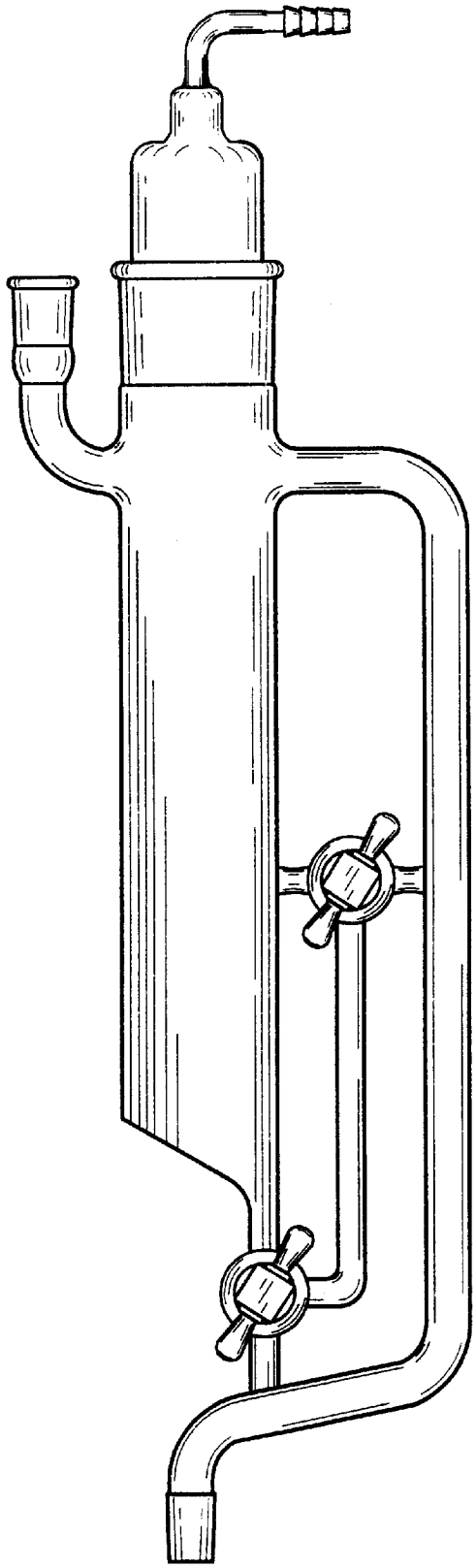

FIG. 3

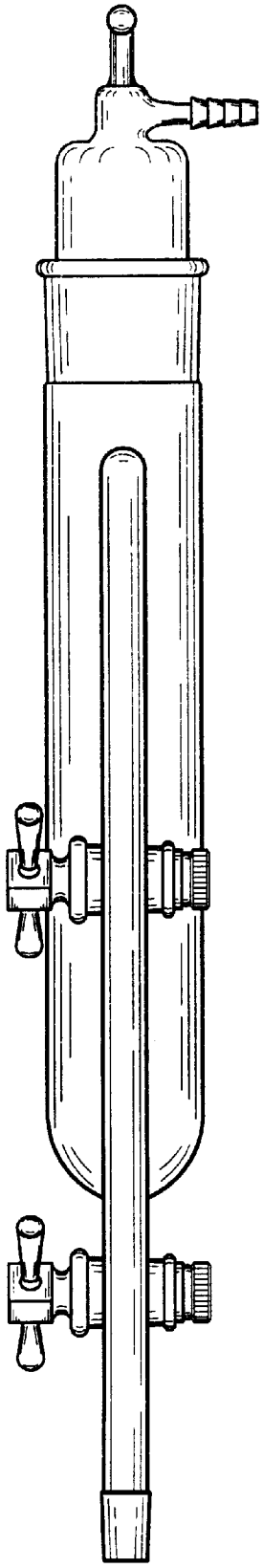

FIG. 4

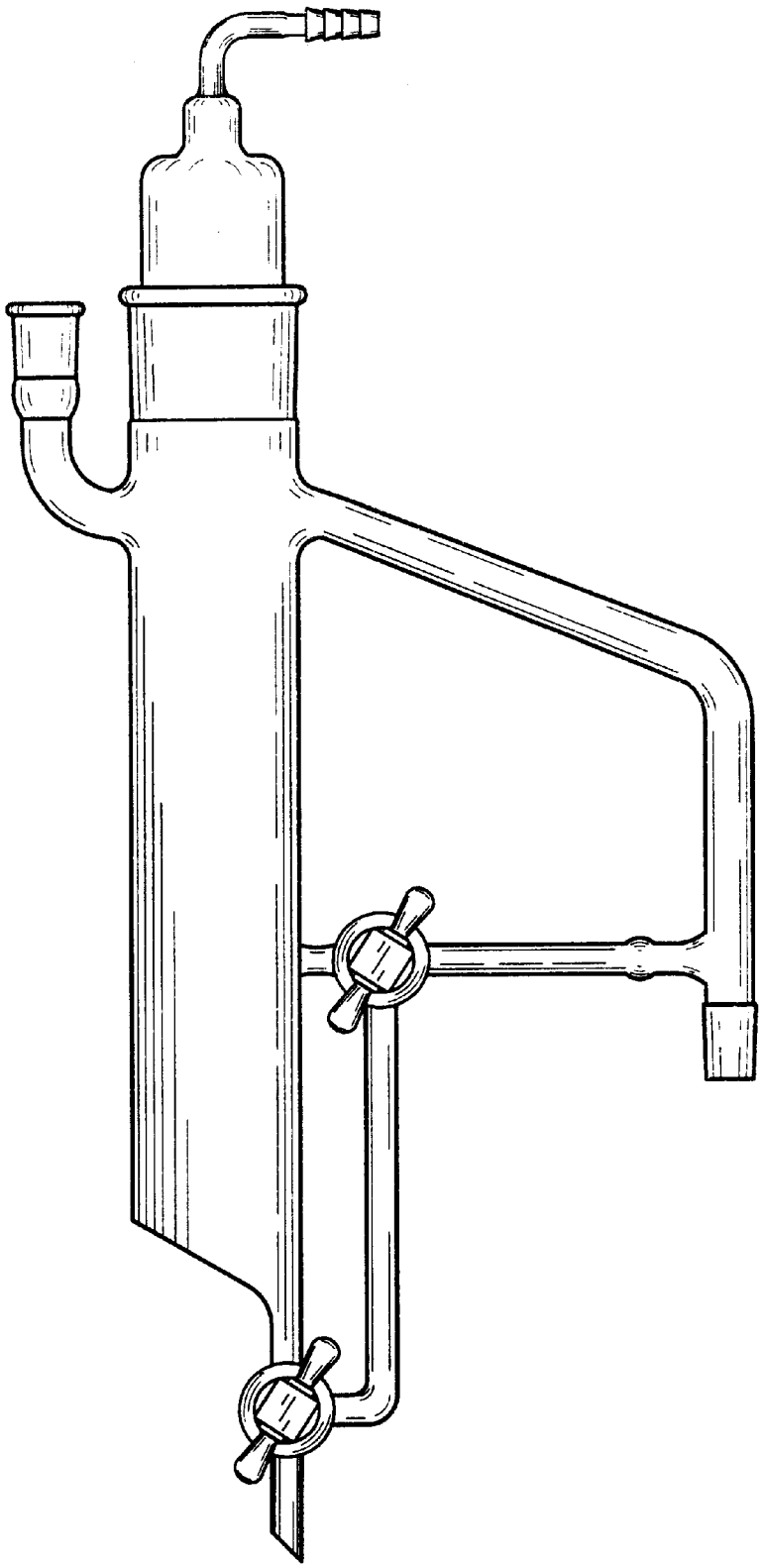

FIG. 5

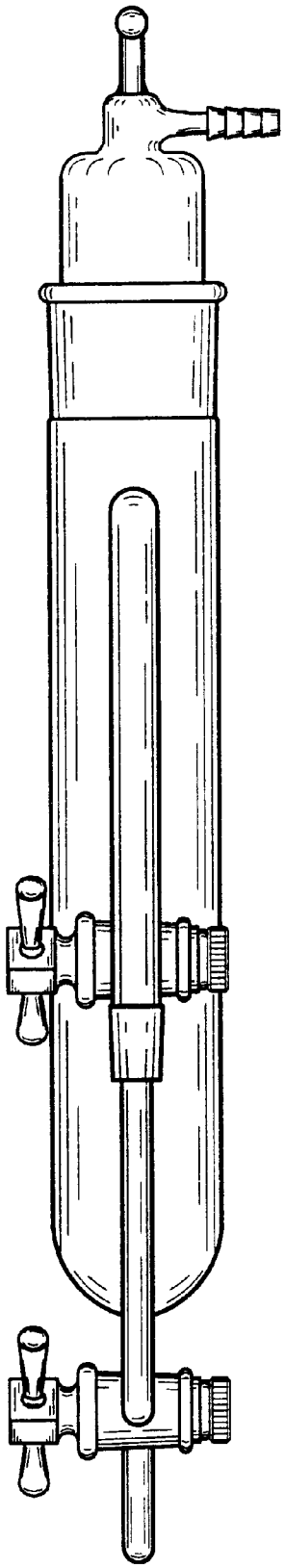

FIG. 7